BEST MINIMAL ADJUSTABLE

code BT553.940WL/01

D 150 CRI >90 IP20 IP23

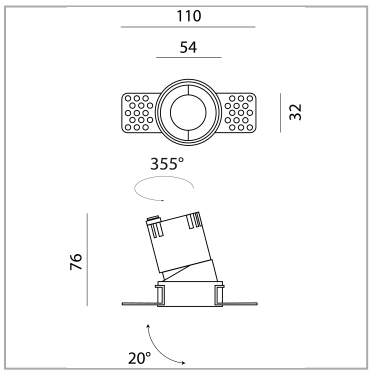

PRODUCT DESCRIPTION

Trimless direct adjustable recessed light, indoor, circular shape complete with high efficiency COB LEDs, CRI>90 polycarbonate secondary optics. Colour body white complete with . Optical body made of die-cast aluminum, passive dissipation with black anodized aluminum heatsink high thermal efficiency. Optical group removable from the ring that is fixed and grouted in plasterboard. Swivelling 360 º on the vertical and tilting axis of +/-20 º on the horizontal axis. Degree of protection IP20/23.

PRODUCT SPECS

Installation method	Trimless recessed
Light source	LED
Absorbed power	5 W
Color temperature	4000K
Color rendering index CRI	>90
Optic	Wide 38°
Finishing	White
Luminous flux of the product	660 lm
Luminous efficiency	132 lm/W
MacAdam color tolerance	2
Life time estimate	50000h L90 B10 ta 25°C
Energy efficiency class	D
Weight	0.49 Kg
Dimension	L55xH76 Ø65 mm
IP Grade	Inst. Parete Ip20 / Inst. Soffitto Ip23
Protection Class	Class III appliance
Power supply/Transformer	Not included
Protocol	See power supply

WEB PAGE

Complies with EN605981 and related notes. In the absence of metric symbols, the measurements are all in millimetres.
Luminous flux and power data are initially subject to tolerances +/- 10%. The values refer to an ambient temperature of 25°C unless otherwise specified.
We reserve the right to make changes to our products at any time.

LUCIFERO'S SRL with sole shareholder - via del Tappezziere, 3 - 40138 Bologna - Italy - +39 051 6014276 - assistenza@luciferos.it - customercare@luciferos.it

LUCIFERO'S SRL with sole shareholder - via del Tappezziere, 3 - 40138 Bologna - Italy - +39 051 6014276 - assistenza@luciferos.it - customercare@luciferos.it